WITTENBORG

TECHNICAL INFORMATION

TYPE NO	TYPE	T.I.-NO
FB 5500	**Coffee vending machines**	**. …01/03**

SERIAL NUMBERS AFFECTED	ISSUED BY
From machine number 529545	**Documentation/ Wittenborg Odense**

SUBJECT	ISSUED FOR (X):
New Inlet Valve (new supplier)	Action: Information: X

COMPONENTS CONCERNED

Omitted	**Article No**	**Part**
	35138000	Inlet Valve
	39208610	Fixing Plate

New	**Article No**	**Change Part**
	41533500	Inlet Valve

MODIFICATION

- From the above machine number the existing inlet valve, part No 35138000, has been replaced by an inlet valve of a new make, Elbi (part No 41533500).
  The new inlet valve is supplied with a fixing plate of its own.

  The inlet valve, part No 35138000, will be supplied as a spare part until the stock is exhausted.

  Please see the following pages containing updated pages for the FB 5500 spare parts list.

REASON

- Constructional change.

REPLACEABILITY

- The new inlet valve with fixing plate, part No 41533500, replaces the existing inlet valve, part 35138000, directly.

  The fixing plate of the new inlet valve has to be moved to the opposite side of the valve body before the valve is fitted into the machine.

CONTACT PERSON

- Technical
  Lars Rehr

  Spare Parts
  Customer Service

29.01.03	Grete Jensen	29.01.03	Lars Rehr
DATE :	PRODUCED BY :	DATE :	CHECKED BY :

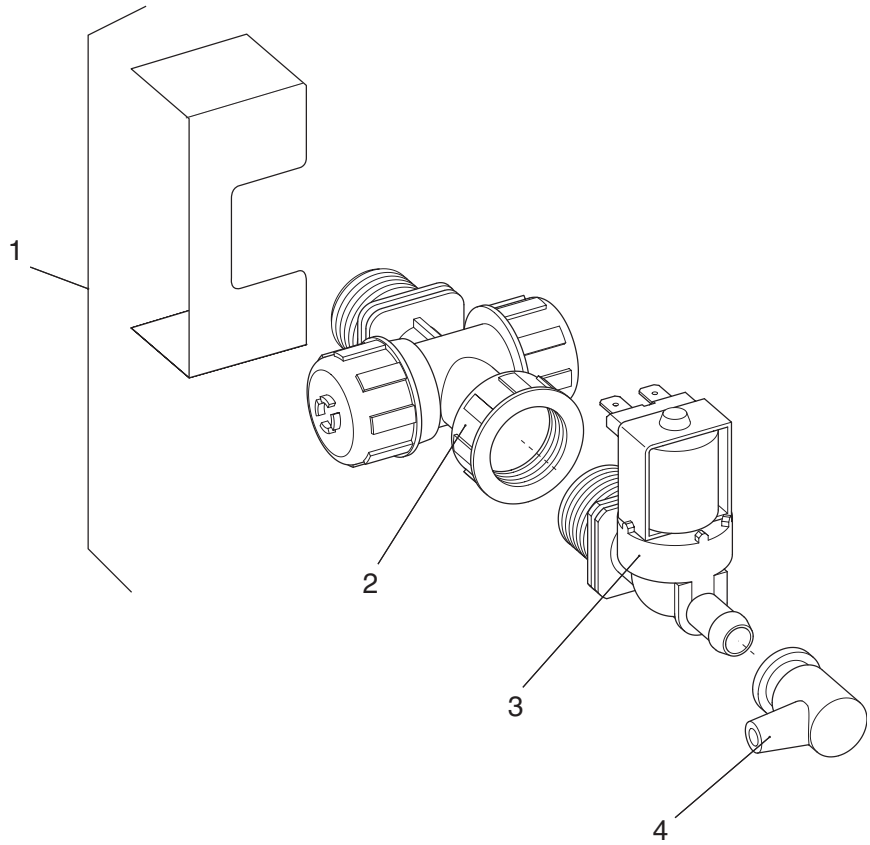

Watersupply, mount. Standard
Wasserzufuhr, mont. Standard
Vandtilførsel, mont standard

SPARE PARTS LIST
MODEL: FB 5500

Index	Partno.	Quant.	Unit	Description
01	80001482	1	PC	PARTS F WATER SUPPLY, STANDARD
02	39269000	1	PC	WATER FILTER
03	41533500	1	PC	INLET VALVE 24V DC
04	35003400	1	PC	ELBOW FLANGE

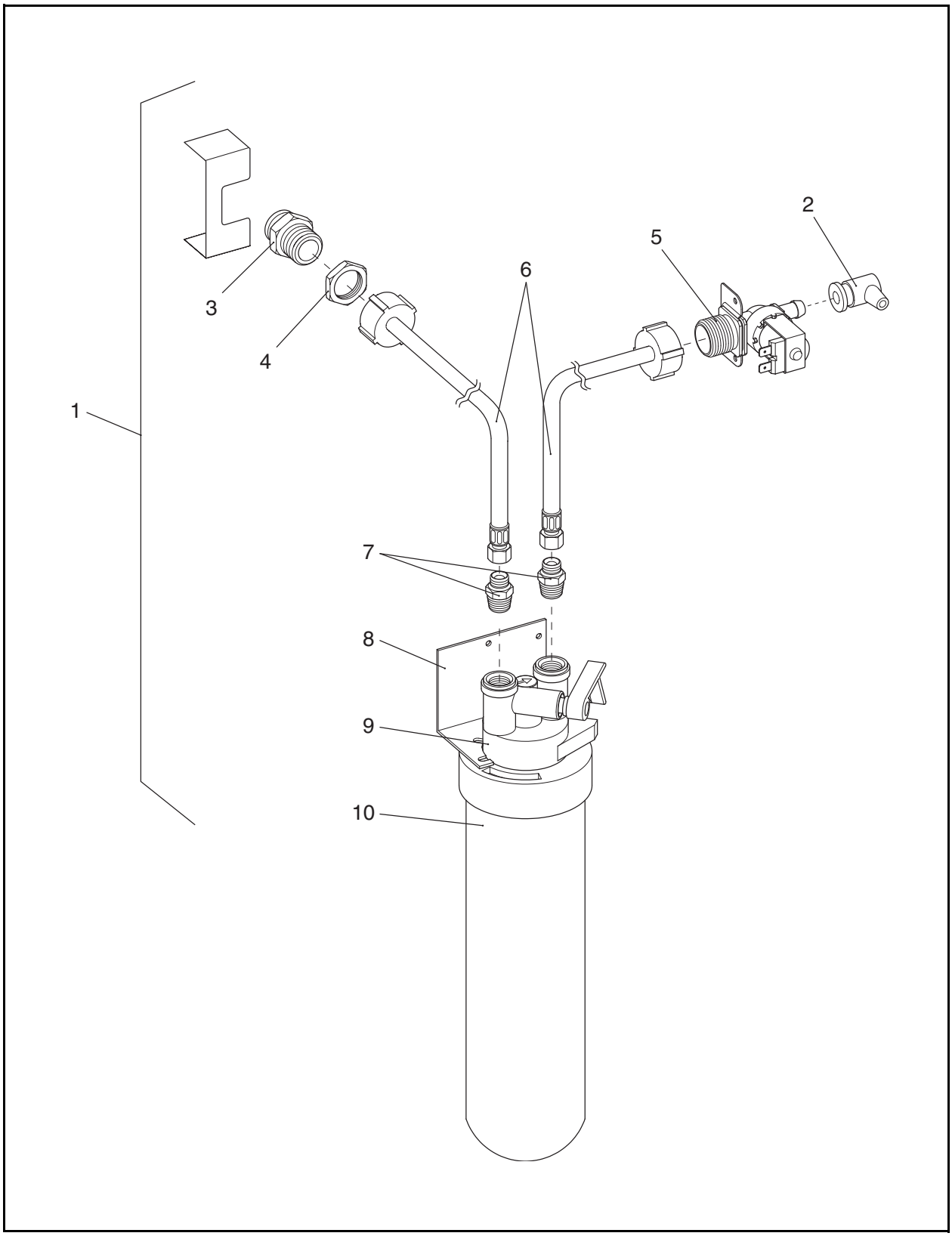

Watersupply, mount. w Everpure
Wasserzufuhr, mont. m Everpure
Vandtilførsel, mont m everpure

SPARE PARTS LIST
MODEL: FB 5500

Index	Partno.	Quant.	Unit	Description
1A	80001483	1	PC	PARTS F WATER SUPPL.W.EVERPURE
1B	80001484	1	PC	PARTS F WATER SUPPL.DECS.EVERP
02	35003400	1	PC	ELBOW FLANGE
03	A-0862	1	PC	COLLARNIPPLE 3/4 PT
04	A-0863	1	PC	COUNTER NUT 3/4 PT
05	41533500	1	PC	INLET VALVE 24V DC
06	30773401	1	PC	REINFORCED HOSE 3/4PT - 1/4PT
07	39370602	1	PC	COLLAR NIPPLE 3/8" - 1/4" RG
08	30847600	1	PC	BRACKET FOR EVERPURE
09	39207904	1	PC	COVER FOR FILTER
10	39207903	1	PC	FILTER CARTRIDGE